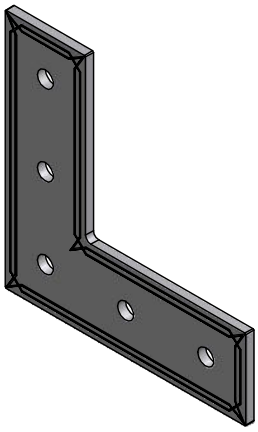

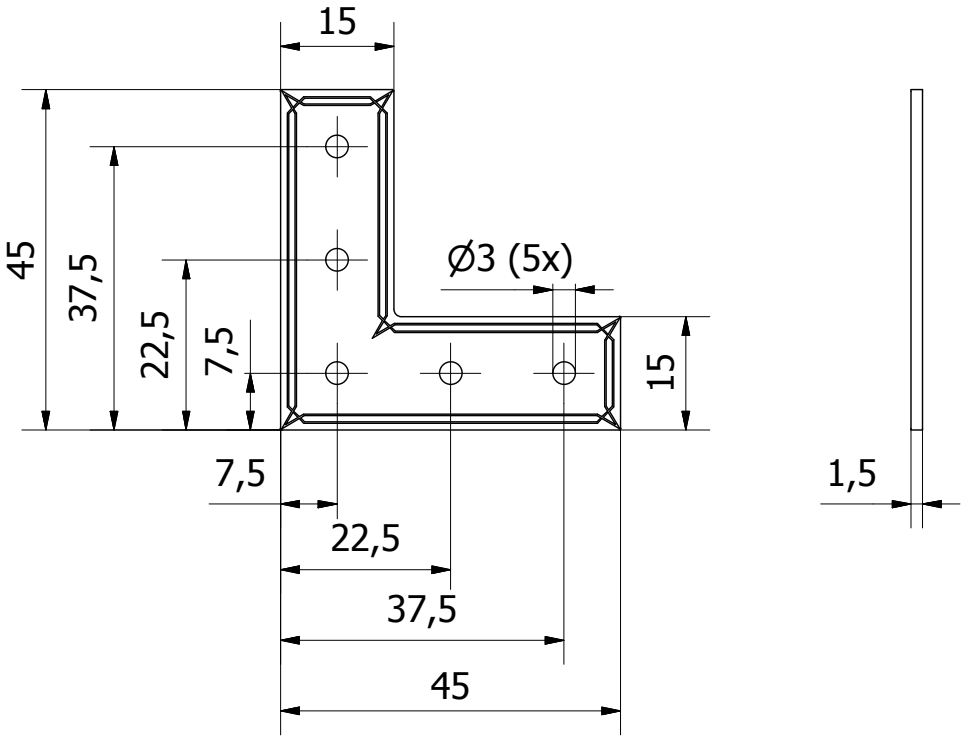

Title: Right angle XL		**Article number: 101732**	
Description: Plate 1,5 mm		**Material: Stainless Steel**	
Scale: 1:1	**America Projection:**	**Tolerance:**	25=±0,5 25,0=±0,05
Date: 18-4-2017		**Format: A4**	MakerBeam
Dimension: mm	**Weight: 0,013 kg**		